[illegible] III [illegible]

[illegible]

6.1 [illegible]

6.1.1 [illegible]

1. [illegible] 10 [illegible] 1 [illegible]
2. [illegible] 2 [illegible]
3. [illegible] 2 [illegible] 3 [illegible]
4. [illegible] 1 [illegible] 4 [illegible]

<[illegible]>

[illegible] 16 [illegible] 5 [illegible] 1 [illegible] 2 [illegible]

[illegible] 10 [illegible] 1 [illegible]

[illegible] 18 [illegible] 2 [illegible] 18 [illegible]

□□□□□□

□□14□□□□□□□□□□□□□□□□□□□□□□□□□□□□□□□□□□□□
□□
□□□□□□□□□□□□□□□

(1) □□□□□□□□□□□□

□□□□□ □□□□□□□□□□□□□□□□□□□6-1□

□□□□□□□□□□□□□□□□□□□□□□□□□□□□□□6-2□

(2) □□□□□□□□□□□□□□□□□□

□□□□□□□□□□□□□□□□□

□□
□□

□□□25□□□□□□□□□□

□□□□□□□□□□□□□□□□□□□□□□□□□

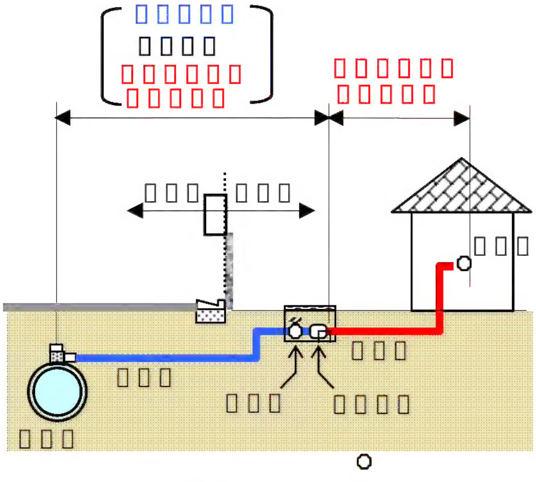

□ 6-1 □□□□

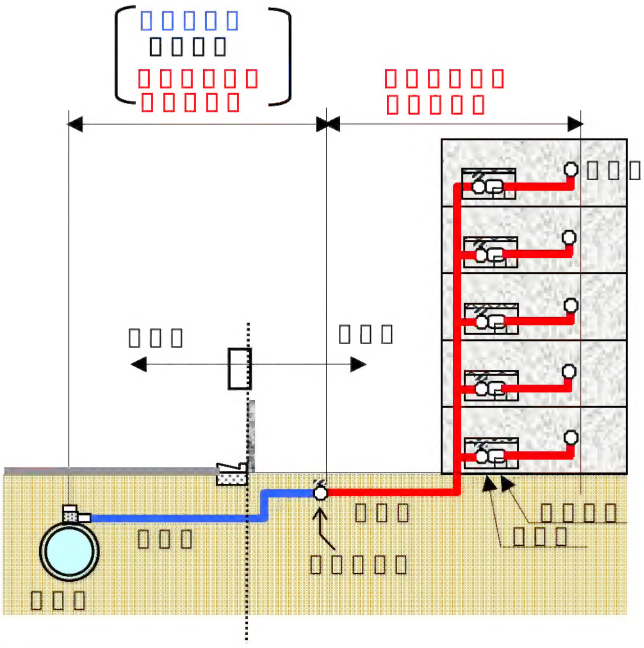

□ 6-2 □□□□□□□□□□□□□□□□□□□

6.1.2 [illegible]

1. [illegible] [illegible]26[illegible]

<[illegible]>

[illegible]①[illegible]②[illegible]

[illegible]

[illegible]

(1) [illegible]

[illegible]

[illegible]

①[illegible]

[illegible]

[illegible]

②[illegible]

[illegible]

③[illegible]

[illegible]

④[illegible]

[illegible]

[illegible]

[illegible]. [illegible]

(2) [illegible]

[illegible]

①[illegible]

[illegible]

②[illegible]

[illegible]

② [illegible]

[illegible]

③ [illegible]

[illegible]

(3) [illegible]

① [illegible]

[illegible]

② [illegible]

[illegible]

③ [illegible]

[illegible] 17 [illegible]

[illegible]

(1) [illegible]

[illegible]

① [illegible]

[illegible]

② [illegible]

[illegible]

③ [illegible]

[illegible]

[illegible]

④ [illegible]

(2)

(3)

①

②

③ ①②

6.1.3 [illegible]

1. [illegible]

2. [illegible]

3. [illegible]

<[illegible]>

[illegible]

[illegible] 6-3 [illegible]

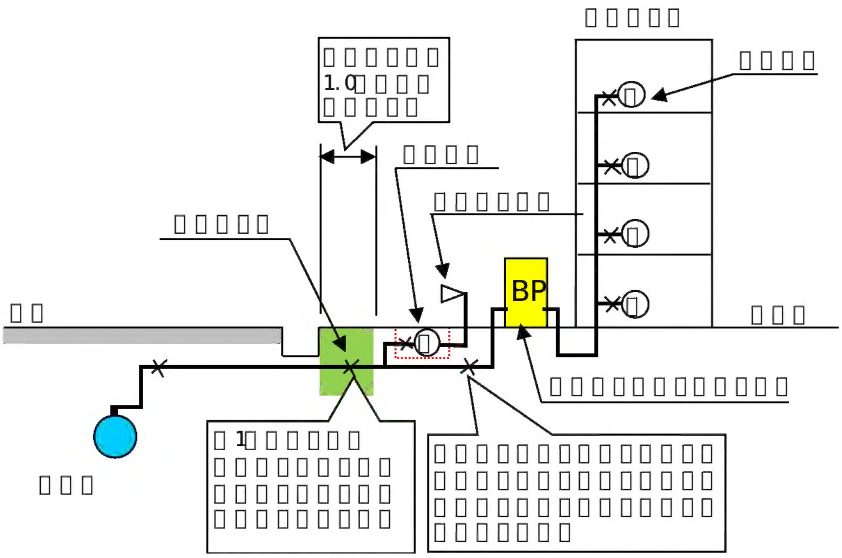

[illegible] 6-3 [illegible]

[illegible]

① [illegible]

② [illegible]

③ [illegible]

④ [illegible]

⑤ [illegible]

[illegible]

[illegible] ([illegible] 6-4) [illegible]

(1) [illegible]

(2) [illegible]

(3) [illegible]

[illegible]

[illegible]

[illegible]

○○○○○○○○ ([illegible]) ○○○○○○○○

[illegible]

□□□□□□□□ ([illegible]) □□□□□□□□

[illegible]

△△△△△△△△ ([illegible]) △△△△△△△△

[illegible] 40 [illegible]

[illegible] 50 [illegible]

[illegible] 6-4 [illegible])

6.2

6.2.1

1.

< >

2004

16 3

2004

( )

6.2.2 [illegible]

1. [illegible]

<[illegible]>[illegible] 6-5[illegible]

[illegible]

[illegible]

[illegible]

[illegible]

[illegible]

[illegible]

[illegible]

[illegible]

(1) [illegible]

[illegible]

(2) [illegible]

[illegible]

(3) [illegible]

(4)

(5)

[illegible]

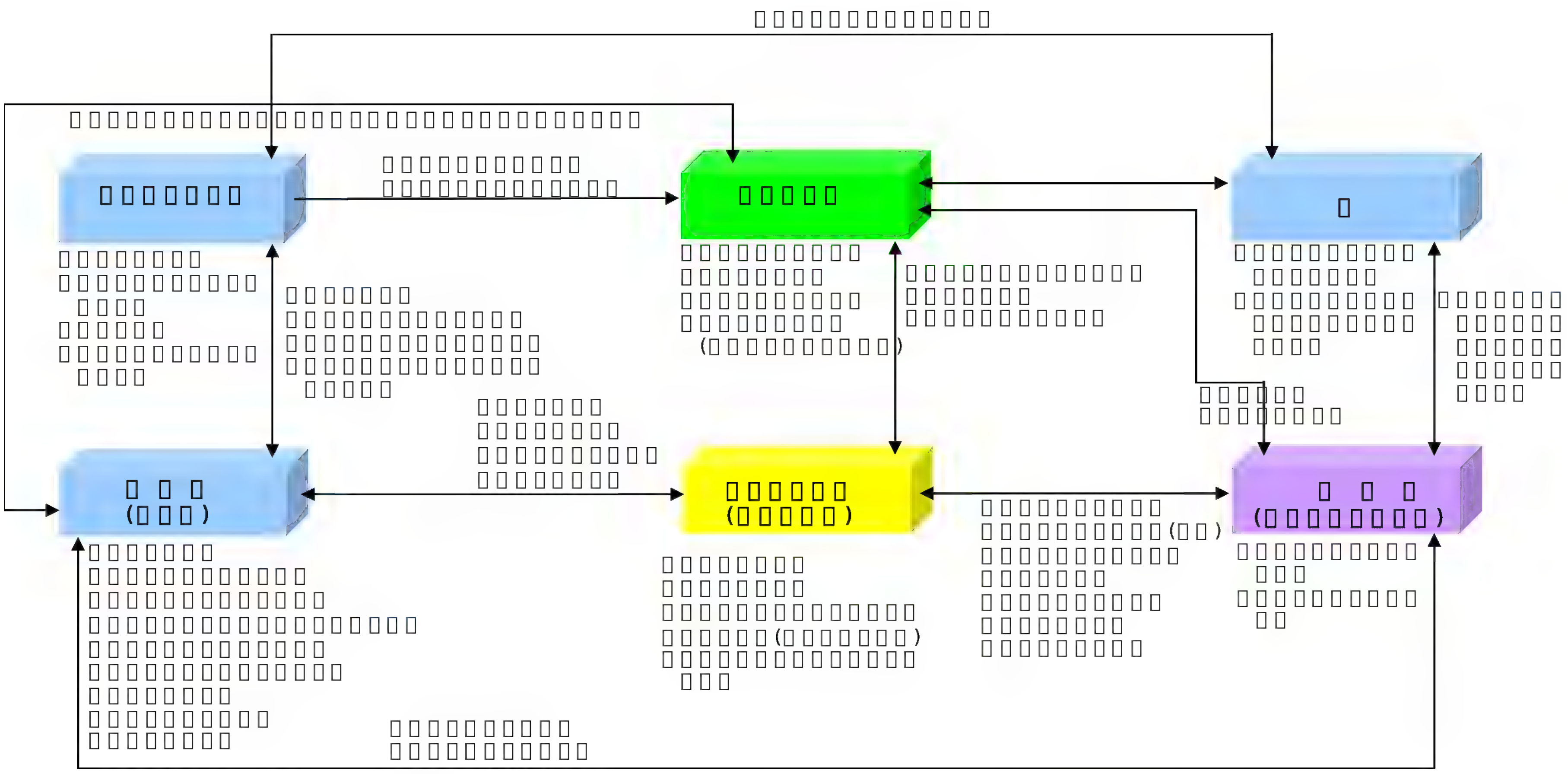

[illegible] 6-5 [illegible]

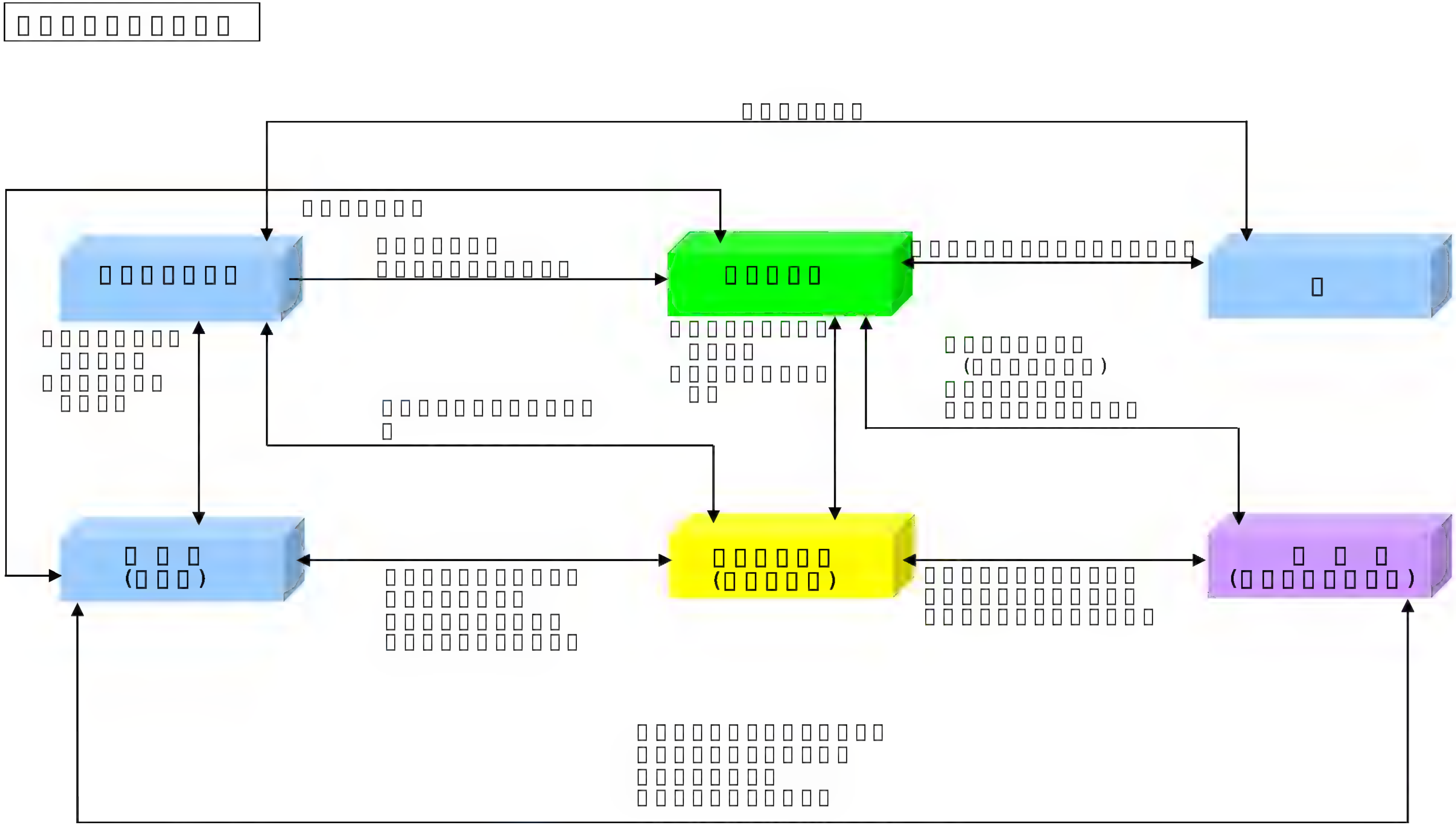

[illegible] 6-6 [illegible]

6.2.3 [illegible]

1. [illegible]

<[illegible]>[illegible] 6-7[illegible]

[illegible]

[illegible]

[illegible]

[illegible]

[illegible]

[illegible]

[illegible]

[illegible]

[illegible]

[illegible]

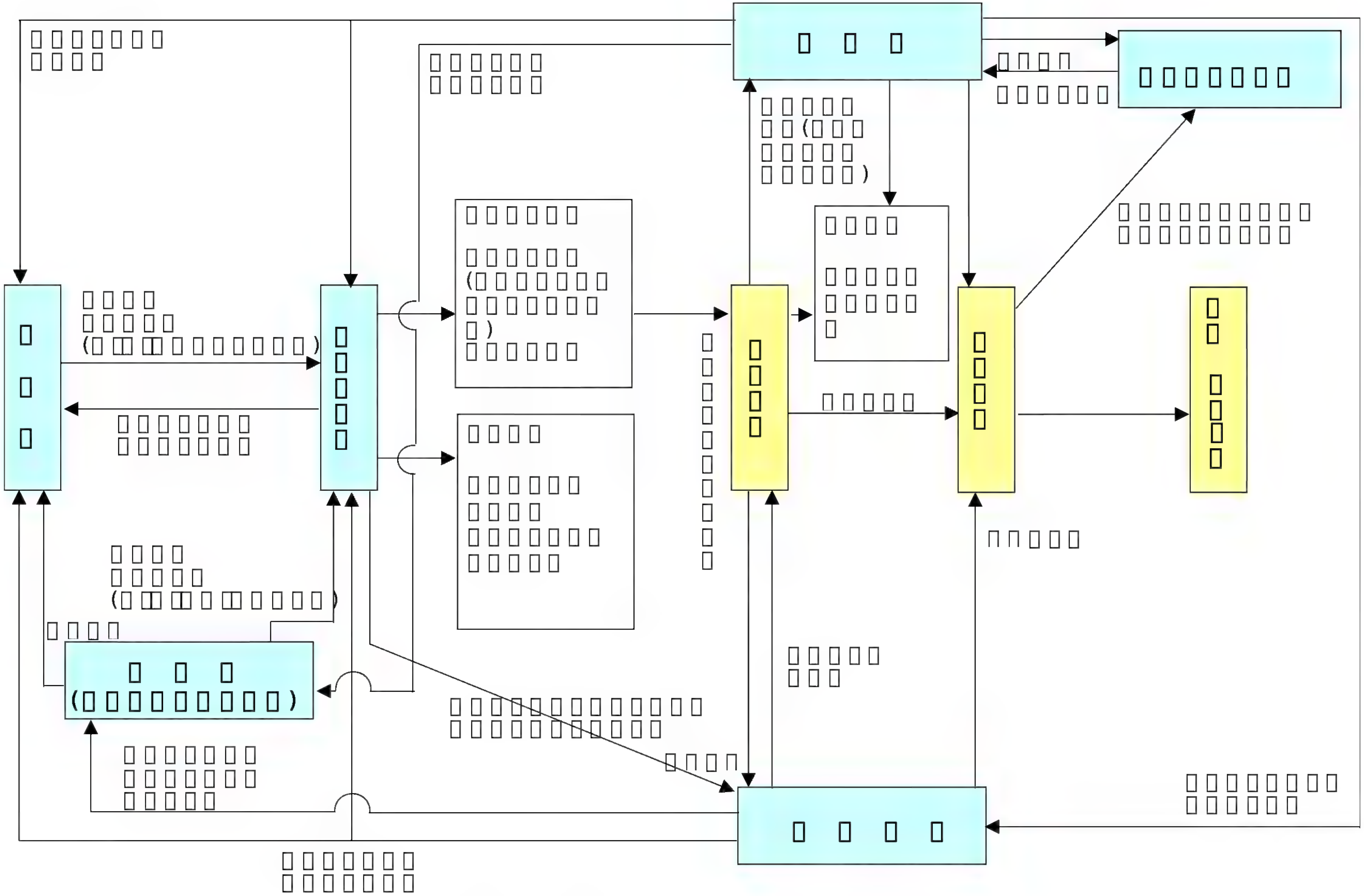

6.2.4 [illegible]

1. [illegible]
[illegible]

<[illegible]>

[illegible]

(1) [illegible]

① [illegible]

② [illegible]
[illegible]

(2) [illegible]

[illegible]
[illegible]

[illegible]

[illegible]

(1) [illegible]

(2) [illegible]

[illegible]
[illegible]
[illegible]
[illegible]

[illegible]

(1) [illegible]

[illegible]
[illegible]

(2) [illegible]

[illegible] [illegible] [illegible]
[illegible]

[illegible]

[illegible]

(1) 1 [illegible]
[illegible]
[illegible]
[illegible]

(2) [illegible]
[illegible] 1 [illegible]

(3) [illegible]

[illegible]

[illegible]
[illegible]
[illegible]

[illegible]
[illegible] 1[illegible]
[illegible]

[illegible]

6.2.5 [illegible]

1. [illegible]

<[illegible]>[illegible] 6-8[illegible]

[illegible]

[illegible]

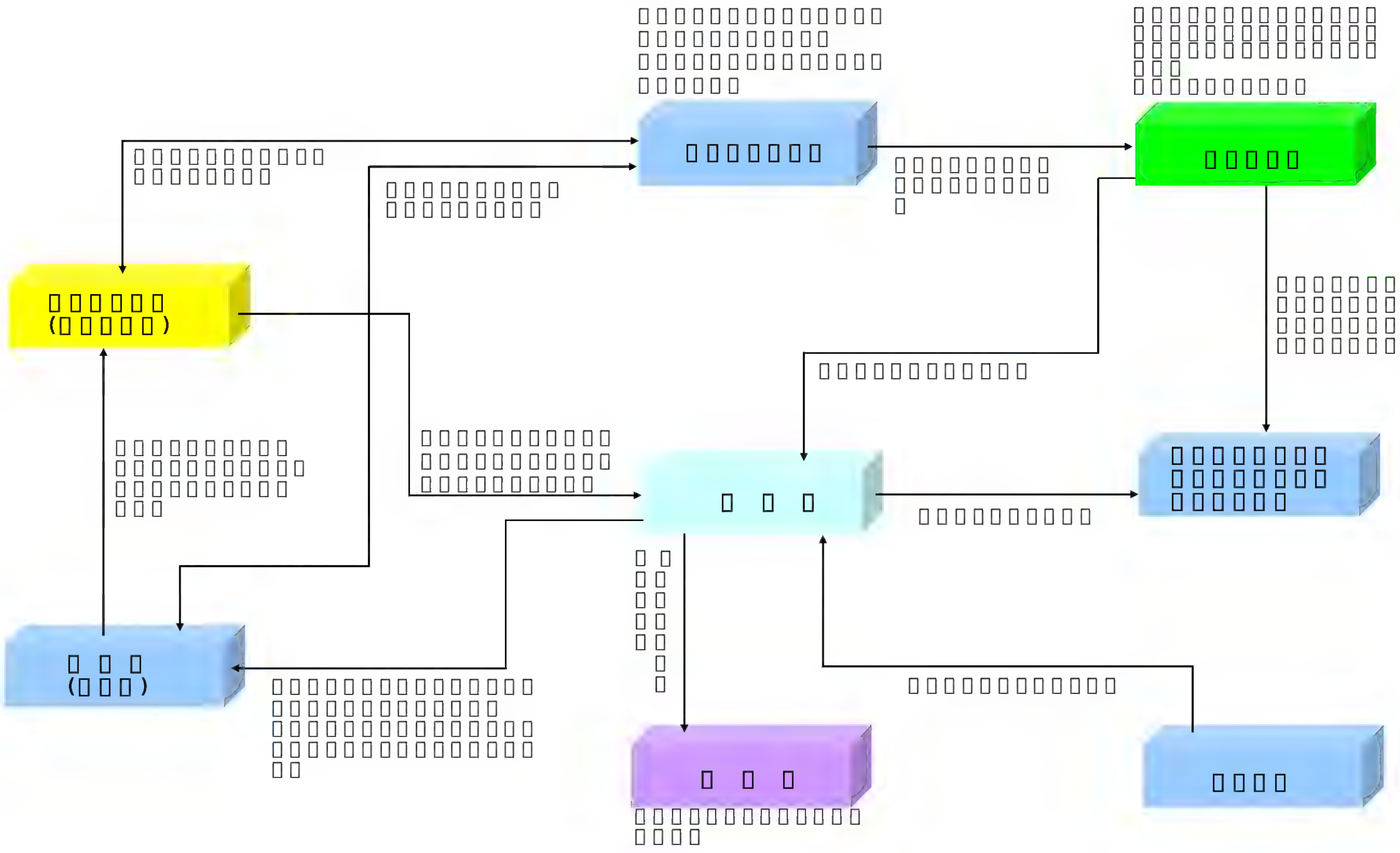

[illegible] 6-8 [illegible]

[illegible]

7.1 [illegible]

1. [illegible]
[illegible]

(1) [illegible]
[illegible]

(2) [illegible]

(3) [illegible]

(4) [illegible]

(5) [illegible]

([illegible] 13[illegible] 2[illegible])

<[illegible]>

[illegible] 7-1[illegible] 7-2[illegible]
[illegible]

[illegible] 7-1 [illegible]

[illegible]	[illegible]
[illegible]	[illegible]
[illegible] ([illegible])	[illegible] [illegible] [illegible] [illegible] [illegible] [illegible] [illegible] [illegible] [illegible] ① [illegible] ② [illegible]

□ 7-2 □□□□

□□□□□□□□□□		□ □ □ □ □
□□□□□	1.□□□□□□□□	□□□□□□□□□□□□
	2.□□□□□□□□	□□□□□□□□□□□□□□□□□□□□□□□□□□□□□ □□□□□□□□□□□□□ □□□□□□□□□□□□□□ □□□□□□□□□□□□□□□□□
	3.□□□□	□□□□□□□□□□□□□□□
	4.□□□	□□□□□□□□□□□□□
	5.□□□□□□□	□□□□□□□□□□□□□□□□□□□□□
	6.□□□	□□□□□□□□□□□□□□□□□□□□□
□□	1.□□	□□□□□□□□□□□□□□□□□□□□□□□□□ □□□□□□□□□□□□□□□□□□□□□□□□□□□□□□□□□□□ □□□□□□□□□□□□□□□□□□□□ □□□□□□□□□□□□□□□□□□□□□□□□□□□□□□□□□□□□ □□□□□□□□□□□□□□□□□□□□□□□□□□□□□□□□□□ □□□□□□□□□□□□□□□□□□□
	2.□□	□□□□□□□□□□□□□□
	3.□□	□□□□□□□□□□□□□□□□□
□□□□	1.□□□□	□□□□□□□□□□□□□□□□□
	2.□□	□□□□□□□□□□□□□□
□□□	1.□□□□□□□□	□□□□□□□□□□□□□□□□□□□□□□
□□□□		□□□□□□□□□□□□□□□□□□□□□□□□ □□□□□□□□□□□□□□□□□□□□□□□□□ □□□□□□□
□□□□		□□□□□□□□□□□□□□□□□□□□□□□□□ □□□□□□□□
□□□□□		□□□□□□□□□□□□□□□□□

□□□□□□□□□□□□□□□□□□□□

(1) □□□□□□□□ 1.75 MPa□□□□□□□□□□□□□□□□□□□□□□□□□□□□□□□□□□

□□□5.6.5□□□□

(2) □□□□□□□□□□□□□□□□□□□□□□□□□□□□□□□ 7-3 □□□□□

□ 7-3 □□□□□□□

□□	□□□□	□□	□□□□
□□	□□□□□□□□□□	□	□□□□□□□□□□
□	□	□□	□

7.2 [illegible]

1. [illegible] ([illegible] 15[illegible])

<[illegible]>

[illegible]

[illegible]

[illegible]

[illegible] 50[illegible]

(1) [illegible]

(2) [illegible] 0.75MPa [illegible] 20 [illegible] 0.75MPa [illegible] 10 [illegible]

[illegible]

(1) [illegible]

(2) [illegible]

① [illegible]

② [illegible]

③ [illegible]

④ [illegible]

⑤ [illegible]

⑥ [illegible] 0.1 mg/ℓ [illegible]

⑦ [illegible]

⑧ [illegible]

7.3 [illegible]

1. [illegible] [illegible] ([illegible] 14 [illegible] 3 [illegible])

<[illegible]>

[illegible]

[illegible]